KREBE	WASHING MACHINE PCF-10 Dimensions sheme	TIPPO

2007

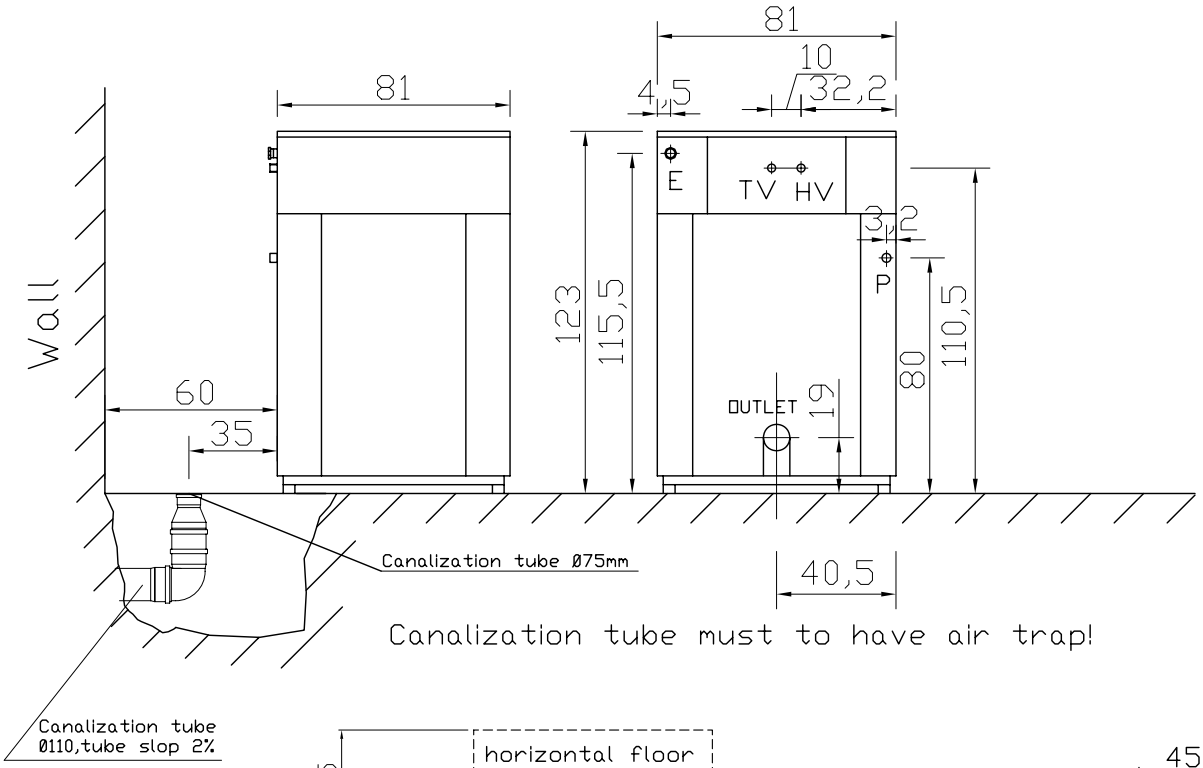

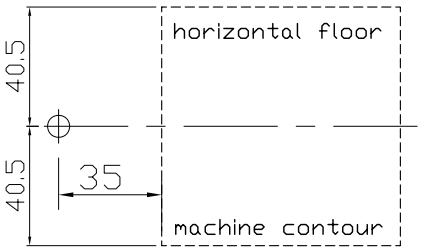

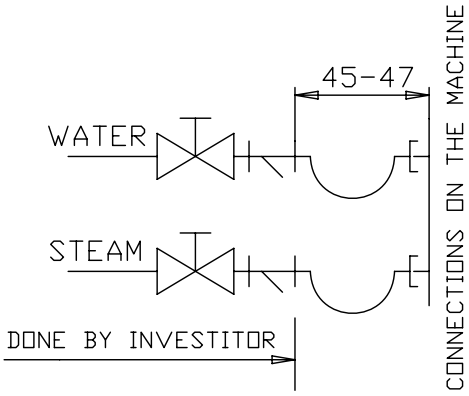

El.connections over GS switch.
Leave the lenght of el.cable longer than 1 m.

Dimensions in cm!

TEHN. CHARASTERISTICS / Type of the machine	Units	PCF-10-Pv	PCF-10-Pn	PCF-10-E	PCF-10-K
CAPACITY	kg/fill.	11			
DIMENSIONS	mm	810x810x1230			
WEIGHT	kg	370			
G-faktor		345			
REST HUMIDITY	%	~50			
CONNECTIONS: cold water -HV	DN (col)	20 (3/4)			
warm water 45C-TV		20 (3/4)			
cold water-soft -HVM		20 (3/4) - option			
steam (direct) -P		15 (1/2)	20 (3/4)		Pv or Pn
CANALISATION -KA	mm	75			
EL.CONNECTION CABLE -E	mm2Cu	3x2,5		5x4	
EL.CONNECTION POWER	kW	2,3		11,3	
PROTECTION	A	16		20	
TENSION		230V,1N,50Hz		400V,3NAC,50Hz	
CONNECT.HEAT.POWER: steam	kW	30			30
electric	kW			9	
water	l/s	1			
PRESSURE ON INLETS: water	bar	3 - 6			
steam		6 - 10	0.3 - 0.5		Pv or Pn